dako
FURNITURE

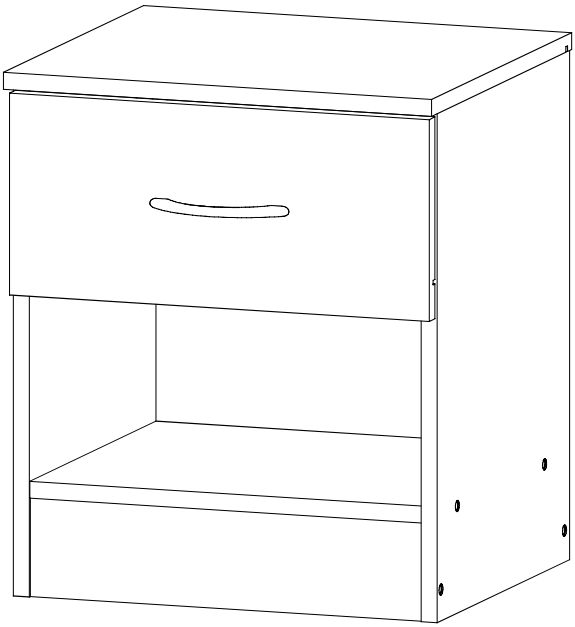

ESSENTIAL

DF-BR100BST-1D

Bedside table

Scan me
www.dakohome.co.uk

INSTRUCTION 1

ASSEMBLY 4

Guidelines and information about the product

BEFORE USING THE PRODUCT, READ THE ENTIRE INSTRUCTION CAREFULLY.
KEEP THE INSTRUCTION FOR FUTURE REFERENCE.

1. **Assembly and Safety:** Full safety and efficiency of use can be achieved only if the furniture is assembled according to the instructions. Inform users of the product about all precautions, limitations, and warnings. We are not responsible for problems or injuries caused by using the product inconsistently with this instruction.
2. **Safe Unpacking:** When unpacking the furniture, avoid using sharp tools to prevent damaging its surface.
3. **Proper Assembly:** Ensure that the furniture is assembled according to the manufacturer's instructions, using all provided assembly components.
4. **Furniture Stability:** Make sure the furniture is placed on a level and stable surface. Uneven flooring can cause the furniture to wobble, increasing the risk of tipping over or damage.
5. **Wall Attachment:** For tall, narrow, or heavy furniture such as wardrobes, bookcases, or chest of drawers, it is recommended to secure them to the wall using the included anti-fall strap to prevent tipping.
6. **Avoid Standing and Sitting on Furniture:** Do not stand or sit on furniture not designed for this purpose, such as shelves or countertops, to avoid the risk of tipping or damage.
7. **Drawer and Door Locks:** Install locks to prevent children from opening drawers and doors, which could lead to climbing attempts or pinched fingers.
8. **Avoid Overloading:** Do not exceed the maximum load specified by the manufacturer for shelves, rods, and drawers. Overloading can cause deformation or damage to the furniture.
9. **Even Weight Distribution:** Distribute stored items evenly to maintain the furniture's stability and prevent tipping.
10. **Moving Furniture:** Moving furniture directly on the floor can damage both the floor surface and the furniture itself. To avoid this, it is recommended to:
    - Avoid Dragging Furniture: Whenever possible, lift furniture instead of dragging it. Dragging can scratch the floor and weaken the furniture's structure, leading to broken legs or damaged joints.
    - Protect the Floor During Moving: Use soft materials: If moving the furniture is necessary, place a soft material like a blanket, towel, or rug underneath to minimize friction and protect the floor from scratches.
    - Use Protective Pads: Attach felt pads under the furniture legs to reduce the risk of floor damage when moving.
11. **Avoid Moving Furniture Alone:** When moving or lifting heavy furniture, always ask for assistance. Working together reduces the risk of injury and damage to the furniture.
12. **Moisture Protection:** Furniture boards are sensitive to moisture. Avoid contact with water and do not place furniture in areas with high humidity to prevent swelling and deformation.
13. **Scratch Protection:** Use pads under items with sharp edges and avoid dragging heavy objects across the furniture surface to prevent scratches. Protect furniture from pet claws, which can scratch and damage the surface.
14. **UV Protection:** Do not expose furniture to prolonged direct sunlight to prevent color fading and material degradation.
15. **Heat Protection:** Do not place furniture near active heat sources such as radiators or stoves, or emitting devices (e.g., dishwashers, humidifiers) to prevent damage.
16. **Cleaning and Maintenance:** Clean furniture from dust and maintain it using products specifically designed for this purpose, using a soft cloth dampened with water and a mild detergent. Avoid using hard or sharp objects that could damage the furniture's surface.
17. **Repairing Minor Damages:** For small scratches or dents, special waxes or fillers for furniture boards available at furniture stores can be used.
18. **Do Not Modify the Structure:** Do not independently modify the furniture's structure to maintain its integrity and safe use.
19. **Regular Inspections:** Periodically check the condition of joints, screws, and hinges. Tighten or replace damaged components as needed to ensure safe use of the furniture.

Warranty conditions

1. The Guarantor assures the Buyer of a good quality and accurate functioning of the furniture within the period of 12 months of the manufacturing date.
2. On buying an assembled product The Buyer shall examine the quality and completeness of the product as well as examine the operation of the principal mechanisms and basic components.
3. Warranty Protection does not cover damages caused by inappropriate or careless transport, carriage, assembly or use nor the ones resulting from acts of God or damage as a result of which the price was reduced.
   The Buyer has an obligation to report any visible defects, mechanical damage and the quantity shortages of components and fittings for furniture sold as assembled at the time of purchase. Otherwise, Warranty Protection does not apply.
4. Any adjustments of the product performed by the Buyer will result in loss of warranty protection.
5. If the buyer moves the furniture once it has been assembled, it will result in loss of warranty protection.
6. The Guarantor accepts no liability if the product does not comply with the agreement or if the Buyer knew about this incompatibility or, assessing reasonably, should have been aware of it.
7. Any incompatibilities of the self-assembly products shall be reported to the Seller by the Buyer within fourteen days of its determination.
8. Any non-compliance or failure of the product arising within during the warranty period should be reported at the point of purchase of the product, presenting the warranty card. The Seller will address the claim within 14 days of the notification of non-compliance of the product with the contract. Failure to do so will mean the Seller found the claim justified.
9. Warranty repairs of a product that does not comply with the agreement will be performed by a representative of the Guarantor within 30 working days of the receipt of the notification of non-compliance from the point of purchase.
10. Warranty period will be extended by the time that has elapsed since the complaint to the settlement if during this period the non-compliance reported prevents the use of the product.
11. Where the product does not comply with the agreement, the Guarantor assures the Buyer that he will bring the product into conformity with the contract by performing a repair or a replacement of parts. The representative of the Guarantor decides about the manner and place of performing the repair. If the nature of the defect does not require its removal in factory conditions, the repair is carried out at the Buyer's address.
12. If the defect is not removable or its removal would or might result in loss of the quality of furniture, the settlement of the complaint may be made with the consent of the Buyer by lowering the price of the furniture in question.
13. If the defect is not removable and the Buyer does not agree for the price reduction, the settlement of the complaint may be made by replacing the product with a new one that is free from defects or by issuing a refund to the Buyer, provided the Buyer returns the product.
14. If during the replacement of a faulty product with one that is free from defects or during the agreement cancellation, apart from the faults that resulted in the exchange or the agreement cancellation, it will be noted that the quality of the product decreased due to its use beyond the standard level or due to an adjustment performed by the Buyer or if the product is returned incomplete (shortage of inexhaustible components or equipment that are indispensable in any further sale), the Buyer will be charged for the replacement or an equivalent the missing pieces.
15. The delay in the complaint settlement does not occur when a representative of the Guarantor reported to the Buyer within the agreed period with the aim of settling the complaint, but could not do so due to reasons attributable to the Buyer and thus did it on a different day, no later than within the next 30 days. If the Buyer made it impossible for the repairs to be carried out, it is believed that he resigned powers.
16. The Warranty on the goods sold does not exclude, limit or suspend the rights.
    Buyer under the Act on non-conformity.

Complaints procedure

Should the need arise, we have a formal complaints procedure. Please be assured that your complaint will be dealt with seriously and in a professional manner. We aim to deal with complaints quickly and efficiently in the following way:

1. We will treat all complaints positively and seriously
2. We will make it as easy as possible for customers to complain
3. We will provide support for customers to complain if necessary
4. We will handle complaints quickly and effectively
5. We will keep the customer informed and involved.

Whether you have:

- Received a damaged product,
- Missing elements,
- Issue with assembly,
- You have a general / other complaint

If you wish to complain, please contact us through our email address **complaint@dakohome.co.uk**

Assembly

WARNING!
Before starting assembly, ensure that all parts and hardware are included, match the accompanying parts list, and are free from damage. Failure to do so may result in improper assembly or potential injury. Always follow the instructions carefully and use appropriate tools. Keep out of reach of children.

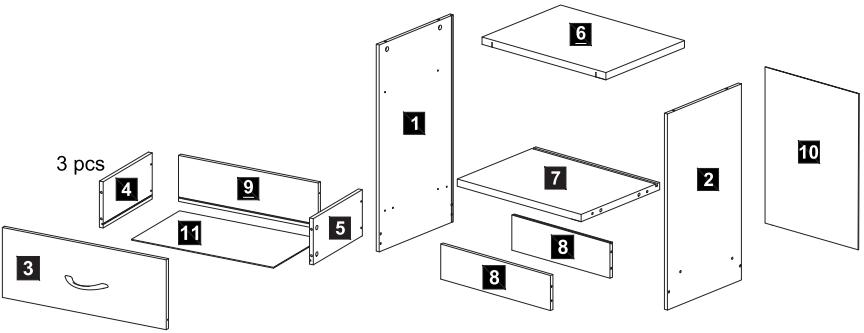

Parts List		
1	Side Panel (L)	1 pc
2	Side Panel (R)	1 pc
3	Drawer Front Panel	1 pc
4	Drawer Side Panel (L)	1 pc
5	Drawer Side Panel (R)	1 pc
6	Top Panel	1 pc
7	Bottom Panel	1 pc
8	Crossbar Panel	2 pcs
9	Drawer BackBoard	1 pc
10	Backboard	1 pc
11	Drawer Bottom Panel	1 pc

Assembly

Hardware List			
A2		Screw M3.5×14 mm	12 pcs
A6		Screw M4×25 mm	2 pcs
A10		Screw M4×38 mm	4 pcs
A17		Screw M6.3×40 mm	8 pcs
A34		Euro Screw M5×8 mm	4 pcs
D6		Wood Dowel 8×25 mm	12 pcs
E20		Wall Mount Strap	2 sets
F2		Mini Fix 15 mm	8 sets
H3		Handle 96 mm	1 pc
L1		Leg Pin 15 mm	4 pcs
M5		Drawer Metal Slide 300 mm	1 set
N1		Allen Key	1 pc
R2		Single Plastic Cap	8 pcs
Y		Crosshead Cover	8 pcs

Assembly

1/12

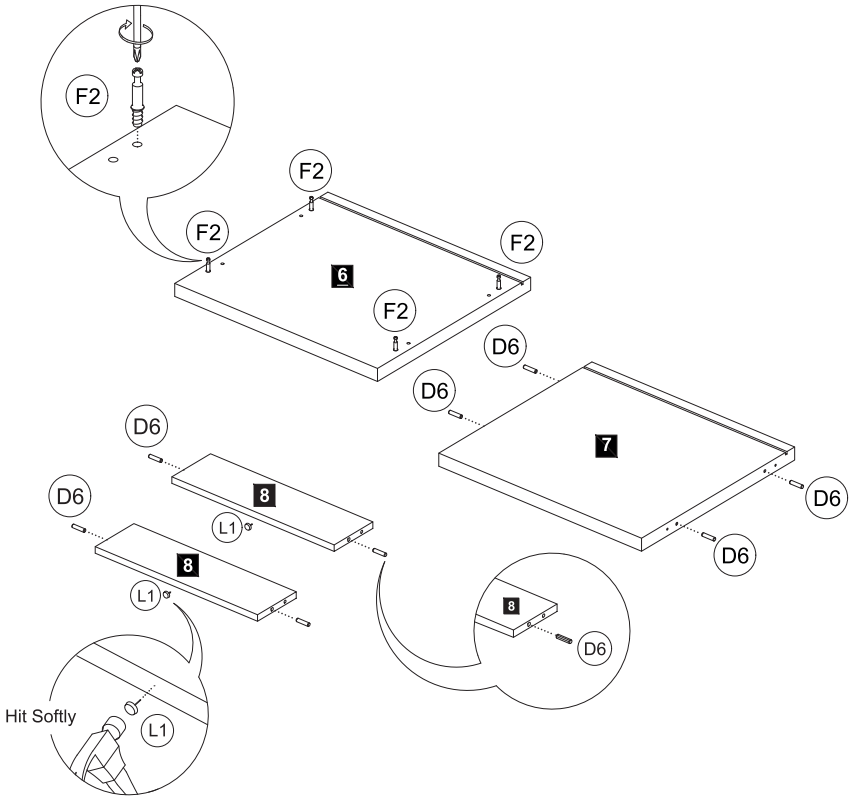

D6		Wood Dowel 8 x 25mm	8 pcs
F2		Mini Fix Bolt	4 pcs
L1		Leg Pin 15mm	2 pcs

Assembly

2/12

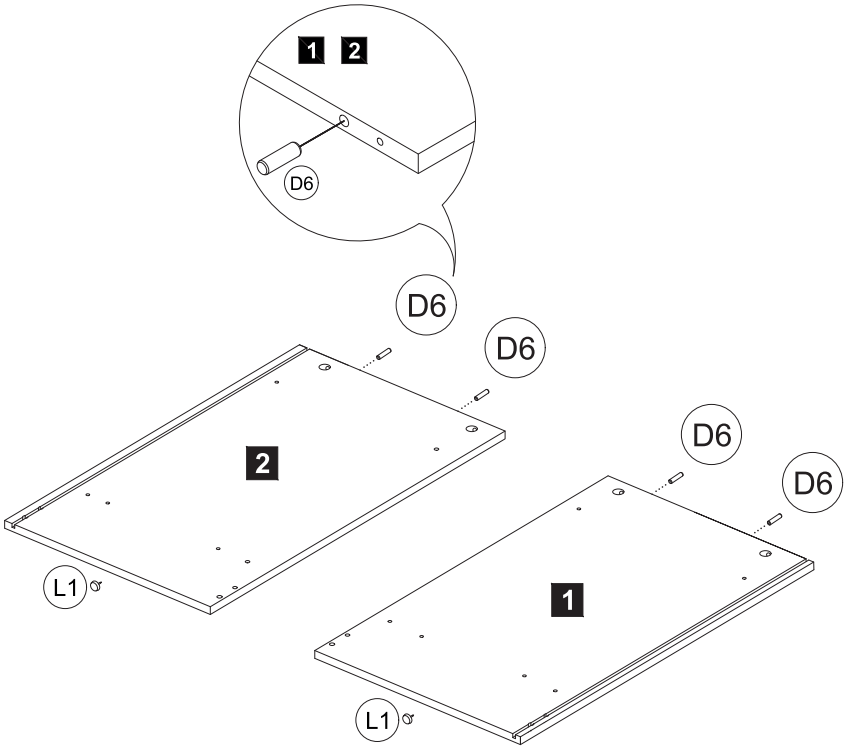

D6		Wood Dowel 8 x 25mm	4 pcs
L1		Leg Pin 15mm	2 pcs

Assembly

3/12

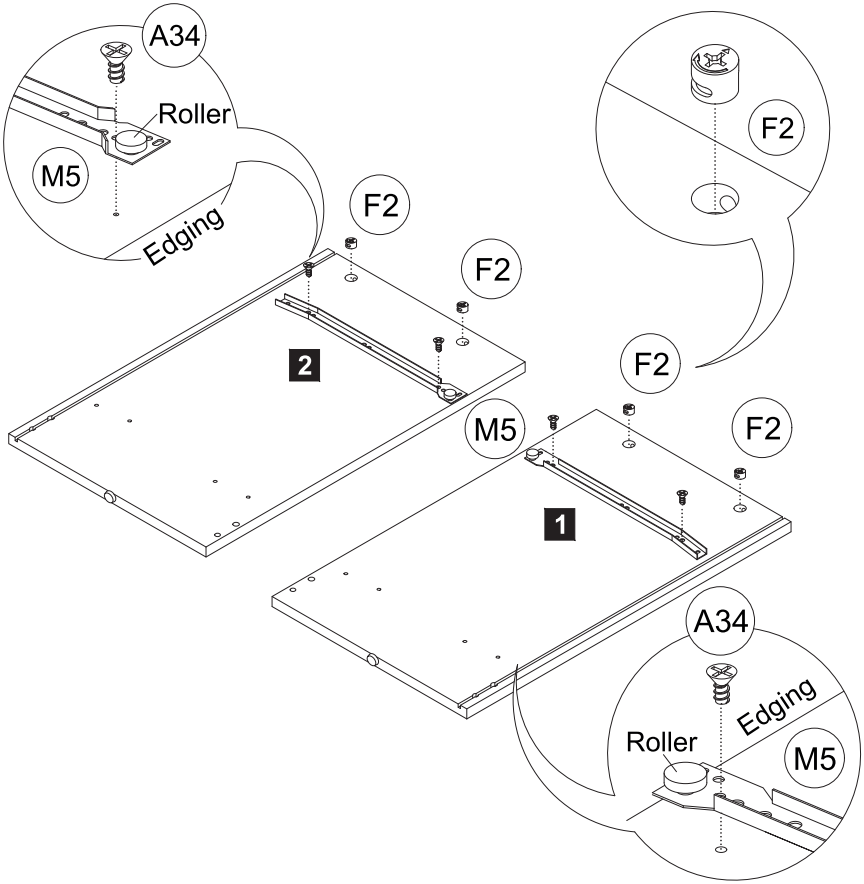

A34		Euro Screw	4 pcs
F2		Mini Fix Cam	4 pcs
M5		Drawer Metal Slide 300mm	1 Sets

Assembly

4/12

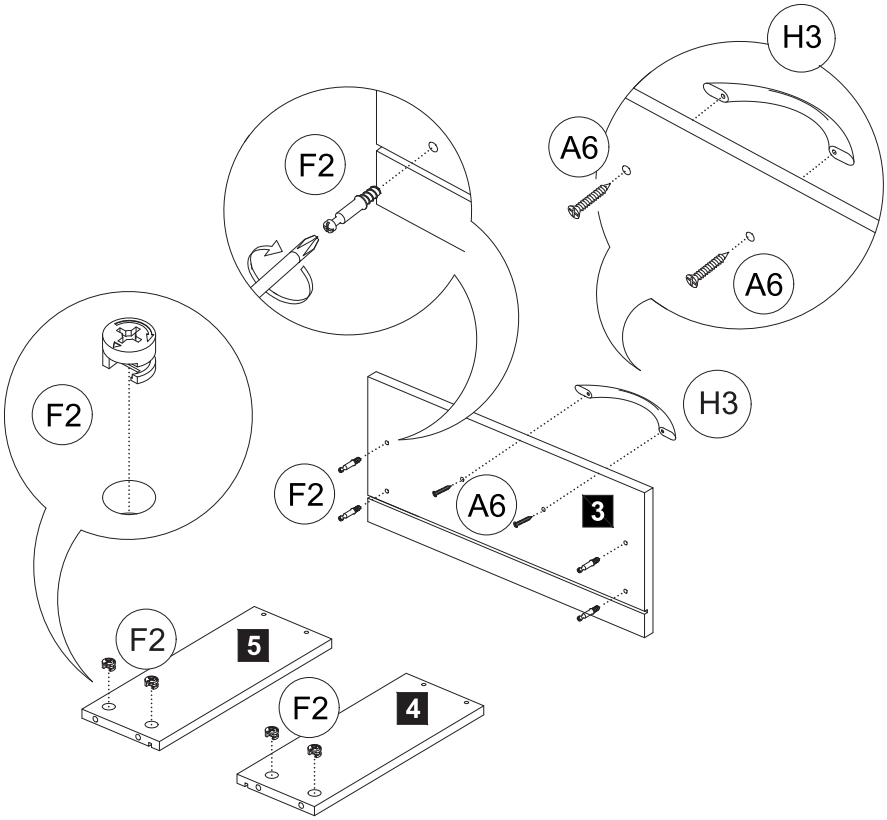

A6		Screw m4 x 25mm	2 pcs
F2		Mini Fix Cam	4 pcs
F2		Mini Fix Bolt	4 pcs
H3		Handle 96mm	1 pcs

5/12

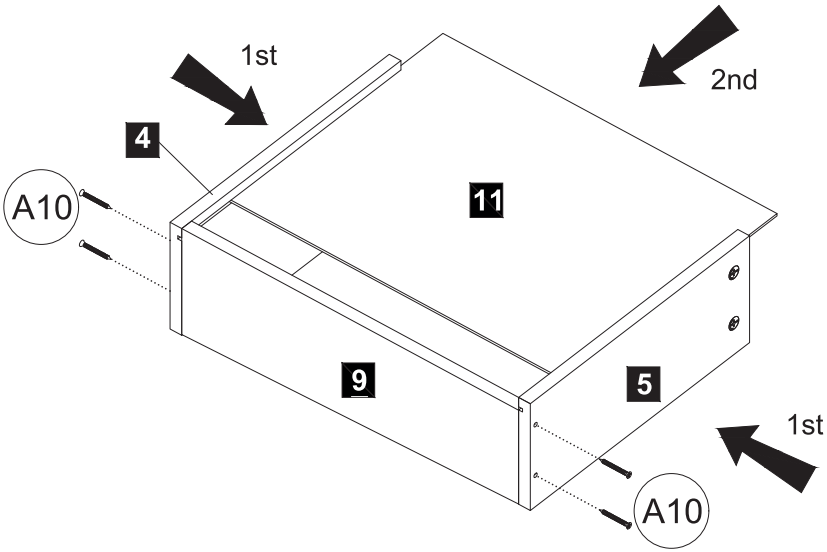

A10		Screw m4 x 38mm	4 pcs

Assembly

6/12

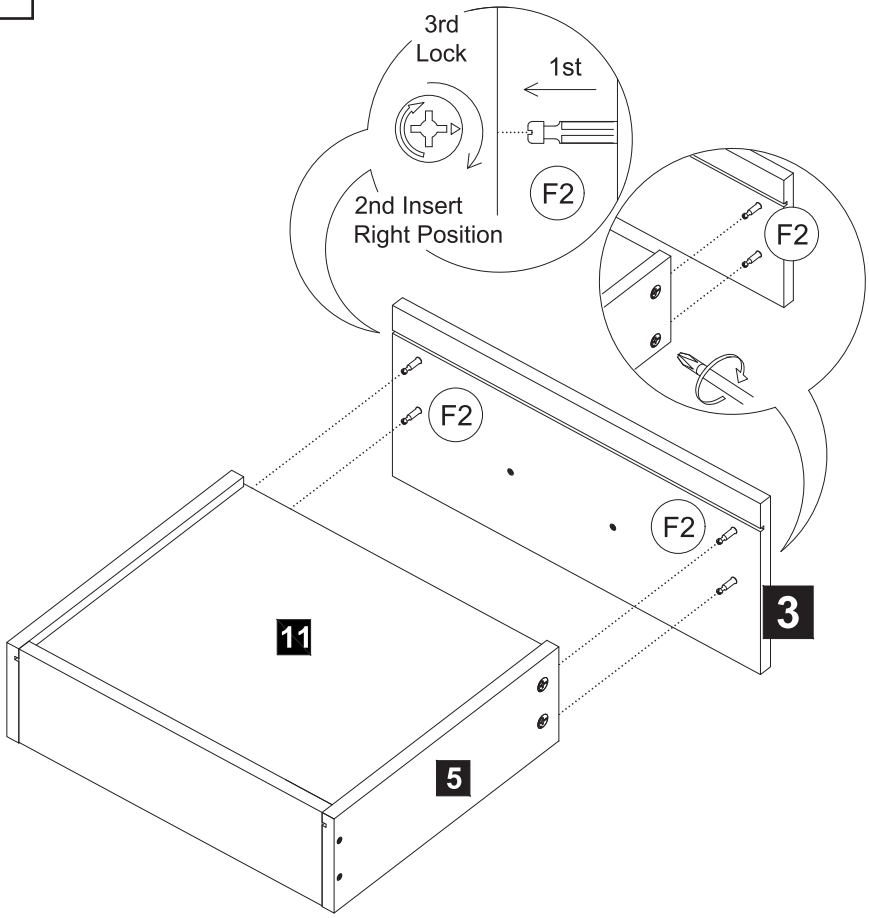

F2	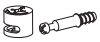	Mini Fix 15mm	4 sets

Assembly

7/12

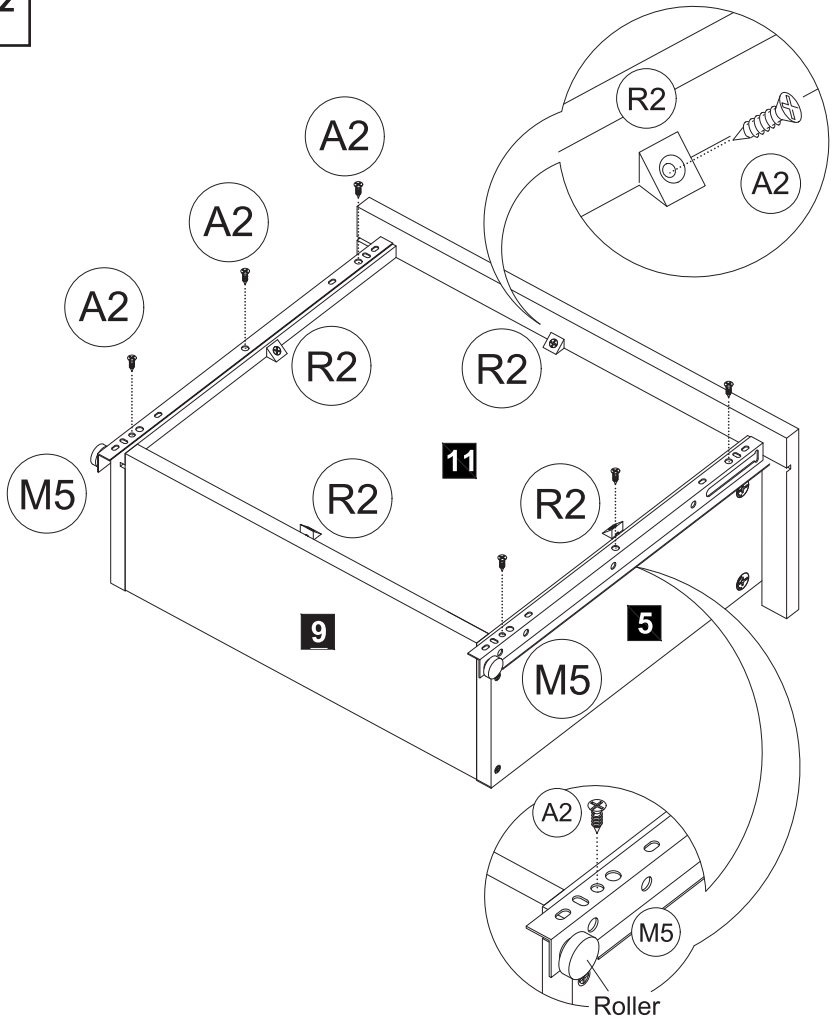

A2		Screw m3.5 x 14mm	10 pcs
R2		Single Plastic Cap	4 pcs
M5		Drawer Metal Slide 300mm	1 sets

Assembly

8/12

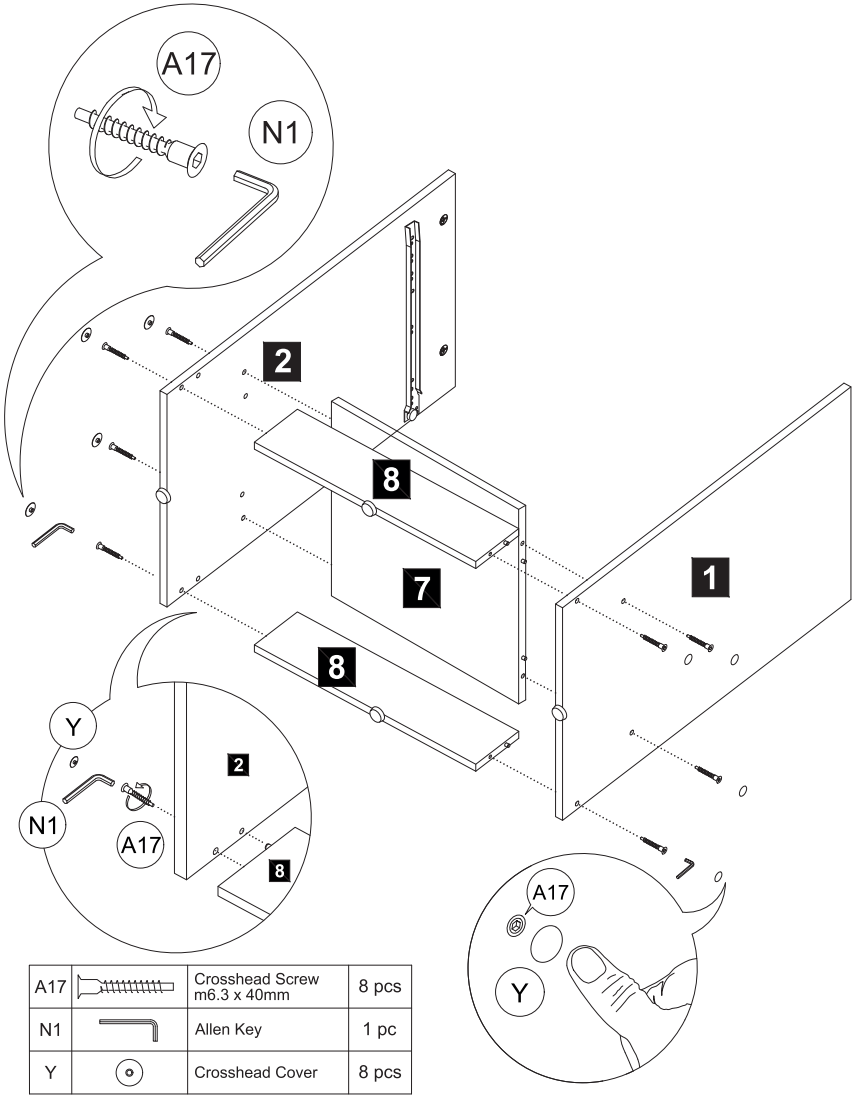

A17		Crosshead Screw m6.3 x 40mm	8 pcs
N1		Allen Key	1 pc
Y		Crosshead Cover	8 pcs

Assembly

9/12

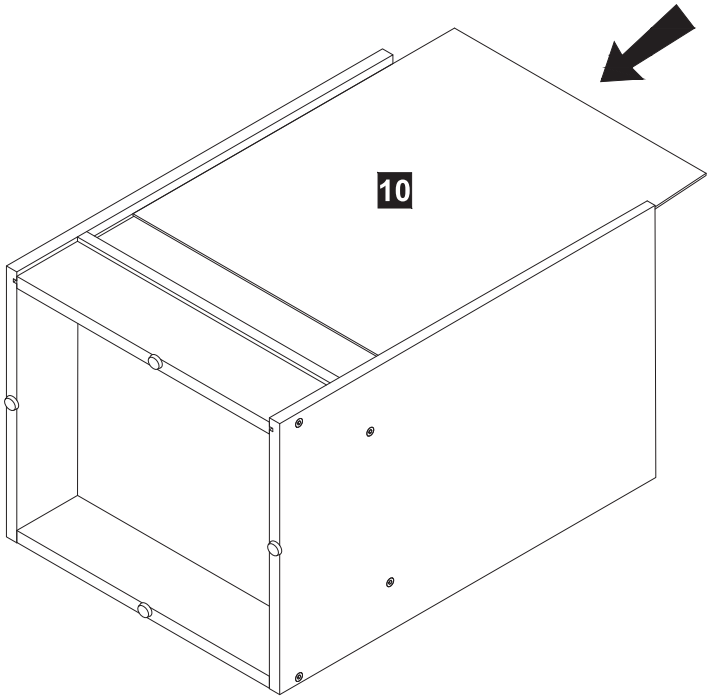

Assembly

10/12

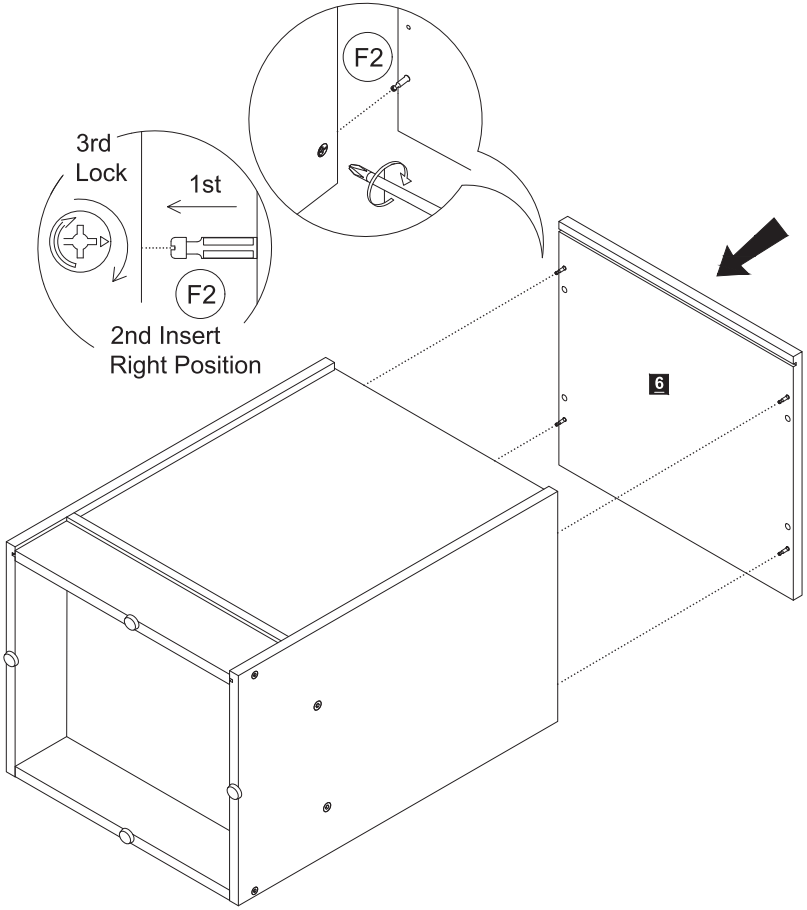

F2	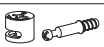	Mini Fix 12mm	4 sets

Assembly

11/12

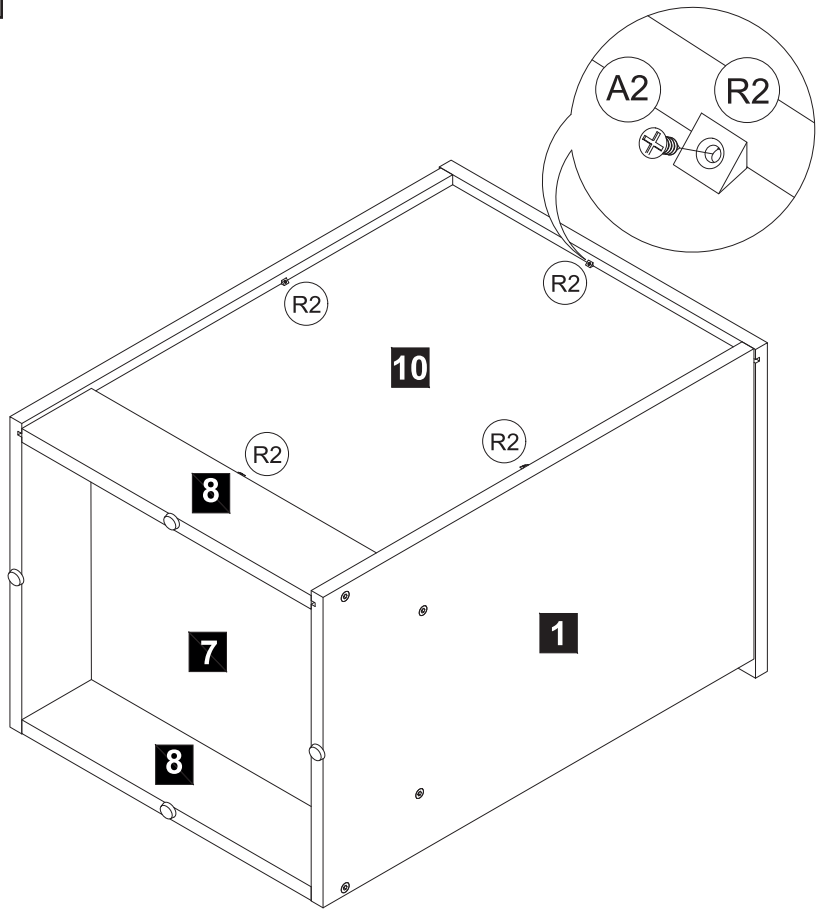

A2		Screw m3.5 x 14mm	4 pcs
R2		Single Plastic Cap	4 pcs

Assembly

12/12

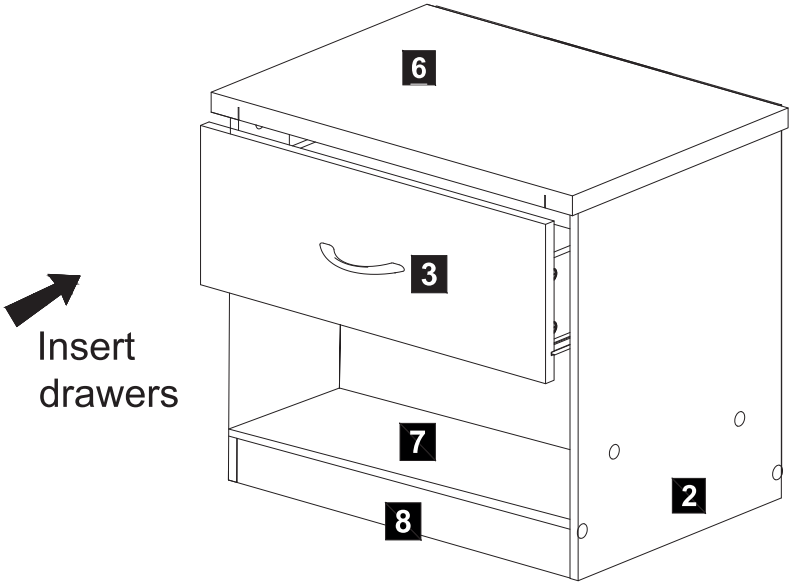

WARNING: Do not exceed maximum load capacity 10 kg for each drawer.

Wall attachment kit

We prioritize safety and strongly recommend securing this furniture to the wall to prevent tipping, which can cause serious or fatal injuries, especially around young toddlers and children.
Included in this packet are the necessary instructions and fittings for wall attachment.
Please note that wall materials vary; ensure these fittings are suitable for your home's walls or seek professional advice.

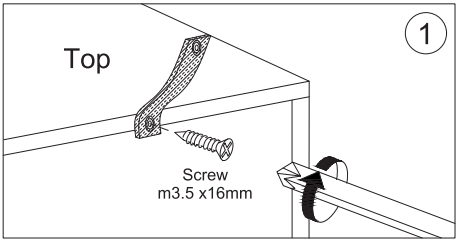

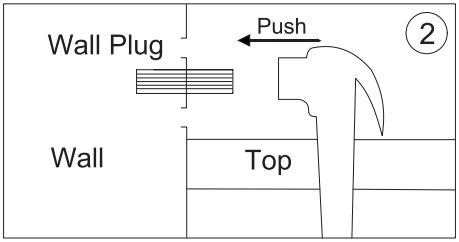

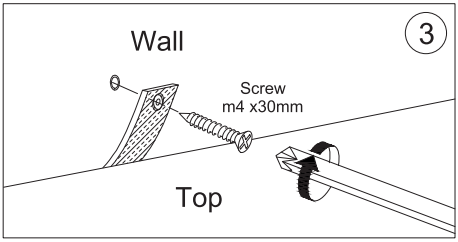

HARDWARE ITEM			QTY
A3		Screw m3.5 x 16mm	2
A7		Screw m4 x 30mm	2
E18		Wall Plug	2
E20		Wall Mount Strap	2

dako
FURNITURE

Scan me
www.dakohome.co.uk

Made in Malaysia

DISTRIBUTION AND IMPORTER

Dako Furniture Ltd
Unit 6 Airfield Industrial Estate
Shipdham
IP25 7SD
UK