dako
FURNITURE

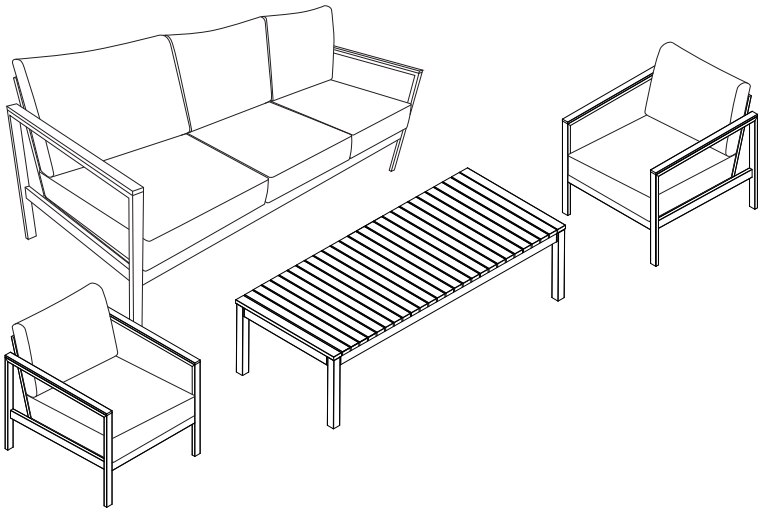

30'

DINOLI

garden furniture

Scan me
www.dakohome.co.uk

INSTRUCTION 1

ASSEMBLY 4

Guidelines and information about the product



BEFORE USE THE PRODUCT, READ THE WHOLE INSTRUCTION CAREFULLY.
KEEP THE INSTRUCTION FOR THE FUTURE.

1. Full safety and efficiency of use can be reached on codition that the furniture will be assembled according to the instruction. Remember to inform the users of the product about all of the precautions, limitations and warnings. We are not responsible for the problems or injuries caused by using the product inconsistently to this instruction.
2. The product can be used according to its purpose only – private use only. It should not be used in public places.
3. Product is intended for outdoor use.
4. Put the proper base (e.g. rubber mat, wooden base etc.) under the product in the assembly area to avoid mess.
5. Put the furniture on the horizontal, stable, even, clean and free from other objects ground.
6. Before use, check if the set is complete and if all of the elements are in the proper places.
7. Do not do any adjustments or modifications, except for the ones described in the instruction. In case of problems contact the service (contact details are given further in the instruction).
8. Furniture should be stored far from heat source such as grill or bonfire.
9. Regular furniture cleaning and storing under the cover will make the set long lasting.
10. Furniture can be cleaned with available detergents based on soap. In case of dust or dirt, the best way to clean it is to wipe it softly with wet cloth or use soft detergent diluted in warm water, then wipe the furniture to dry.
11. To clean the glass counter, use window cleaner, then wipe with soft cloth or paper towel.
12. Do not use pressure washer, pan scurbber, bleach, acid or solvent to clean the furniture.
13. Removable pillowcases are recommended to be washed in maximum 30°C using water with soap or soft detergent, unless the producer advise otherwise.
14. In rainy or windy seasons, the furniture should be protected from adverse weather conditions.
15. To increse the stability of the furniture, thighten the screws at least once for a season.
16. When the season finishes, the furniture has to be cleaned and dried out. It is forbidden to store wet furniture. It should be stored in roofed and dry room. Dried cushions should be placed carefully, so that they don't deform. Storage place should be unheated but with temperature above freezing. In case of storing furniture outside, it is recommended to use protective casing.
17. The warranty applies to the durability of the material the furniture was made of and steel connectors only. Supplier does not guarantee the durability of color or textiles – solar radiation and other weather conditions can cause fading of the product.

Warranty conditions

1. The Guarantor assures the Buyer of a good quality and accurate functioning of the furniture within the period of 12 months of the manufacturing date.
2. On buying an assembled product The Buyer shall examine the quality and completeness of the product as well as examine the operation of the principal mechanisms and basic components.
3. Warranty Protection does not cover damages caused by inappropriate or careless transport, carriage, assembly or use nor the ones resulting from acts of God or damage as a result of which the price was reduced.
   The Buyer has an obligation to report any visible defects, mechanical damage and the quantity shortages of components and fittings for furniture sold as assembled at the time of purchase. Otherwise, Warranty Protection does not apply.
4. Any adjustments of the product performed by the Buyer will result in loss of warranty protection.
5. If the buyer moves the furniture once it has been assembled, it will result in loss of warranty protection.
6. The Guarantor accepts no liability if the product does not comply with the agreement or if the Buyer knew about this incompatibility or, assessing reasonably, should have been aware of it.
7. Any incompatibilities of the self-assembly products shall be reported to the Seller by the Buyer within fourteen days of its determination.
8. Any non-compliance or failure of the product arising within during the warranty period should be reported at the point of purchase of the product, presenting the warranty card. The Seller will address the claim within 14 days of the notification of non-compliance of the product with the contract. Failure to do so will mean the Seller found the claim justified.
9. Warranty repairs of a product that does not comply with the agreement will be performed by a representative of the Guarantor within 30 working days of the receipt of the notification of non-compliance from the point of purchase.
10. Warranty period will be extended by the time that has elapsed since the complaint to the settlement if during this period the non-compliance reported prevents the use of the product.
11. Where the product does not comply with the agreement, the Guarantor assures the Buyer that he will bring the product into conformity with the contract by performing a repair or a replacement of parts. The representative of the Guarantor decides about the manner and place of performing the repair. If the nature of the defect does not require its removal in factory conditions, the repair is carried out at the Buyer's address.
12. If the defect is not removable or its removal would or might result in loss of the quality of furniture, the settlement of the complaint may be made with the consent of the Buyer by lowering the price of the furniture in question.
13. If the defect is not removable and the Buyer does not agree for the price reduction, the settlement of the complaint may be made by replacing the product with a new one that is free from defects or by issuing a refund to the Buyer, provided the Buyer returns the product.
14. If during the replacement of a faulty product with one that is free from defects or during the agreement cancellation, apart from the faults that resulted in the exchange or the agreement cancellation, it will be noted that the quality of the product decreased due to its use beyond the standard level or due to an adjustment performed by the Buyer or if the product is returned incomplete (shortage of inexhaustible components or equipment that are indispensable in any further sale), the Buyer will be charged for the replacement or an equivalent the missing pieces.
15. The delay in the complaint settlement does not occur when a representative of the Guarantor reported to the Buyer within the agreed period with the aim of settling the complaint, but could not do so due to reasons attributable to the Buyer and thus did it on a different day, no later than within the next 30 days. If the Buyer made it impossible for the repairs to be carried out, it is believed that he resigned powers.
16. The Warranty on the goods sold does not exclude, limit or suspend the rights.
    Buyer under the Act on non-conformity.

Complaint

Complaints procedure

Should the need arise, we have a formal complaints procedure. Please be assured that your complaint will be dealt with seriously and in a professional manner. We aim to deal with complaints quickly and efficiently in the following way:

1. We will treat all complaints positively and seriously
2. We will make it as easy as possible for customers to complain
3. We will provide support for customers to complain if necessary
4. We will handle complaints quickly and effectively
5. We will keep the customer informed and involved.

Whether you have:

- Received a damaged product,
- Missing elements,
- Issue with assembly,
- You have a general / other complaint

If you wish to complain, please contact us through our email address **complaint@dakohome.co.uk**

Assembly

List of parts

A	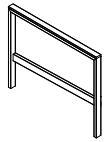	2
A1	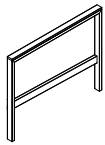	2
B	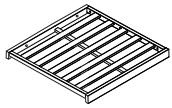	2
C	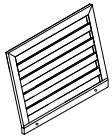	2
D		2
E	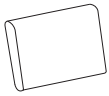	2

K		16
L		4
M		20
N		20
O		1

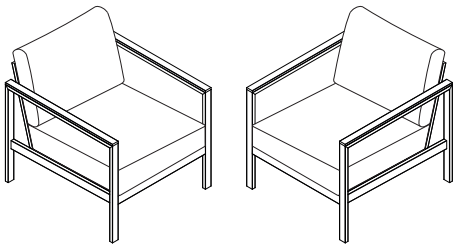

Assembly

1/3

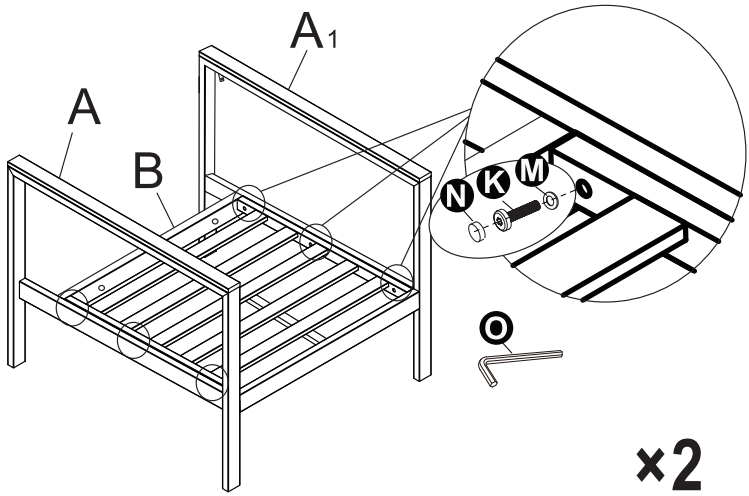

2/3

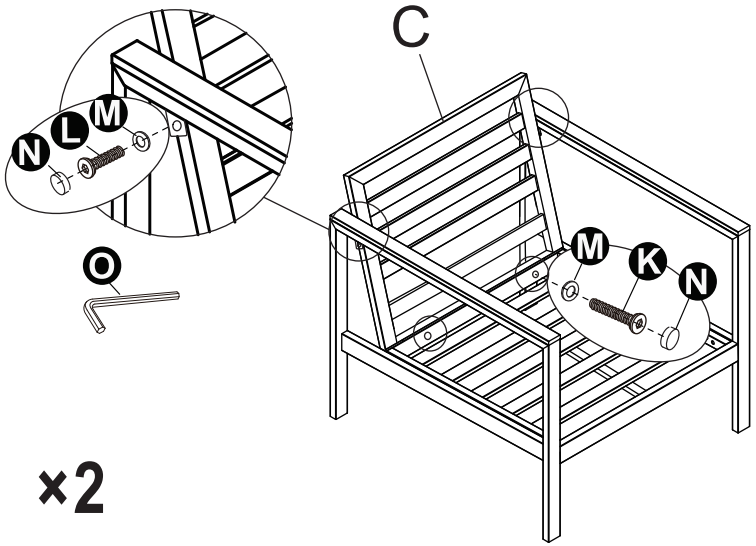

Assembly

3/3

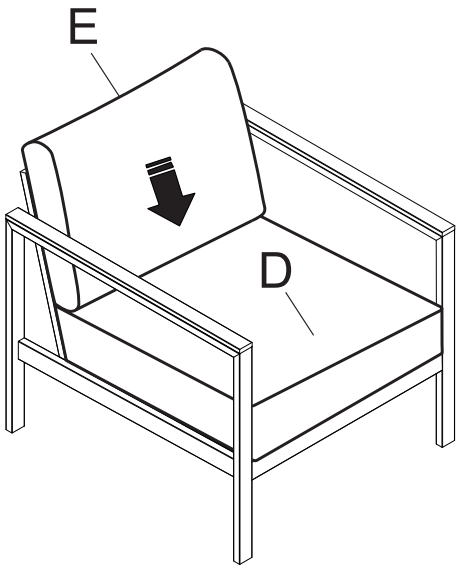

×2

Assembly

List of parts

A	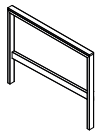	1
A1	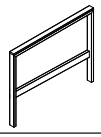	1
F	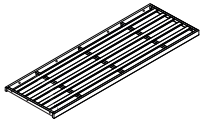	1
G	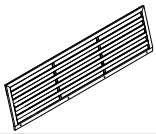	1
D	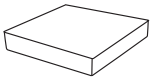	3
E	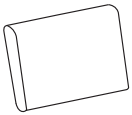	3

K		10
L		2
M		12
N		12
O		1

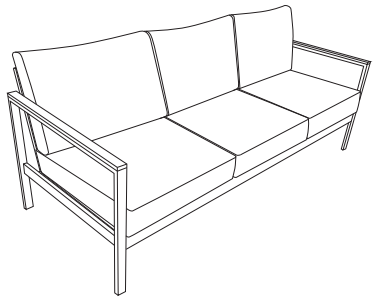

Assembly

1/3

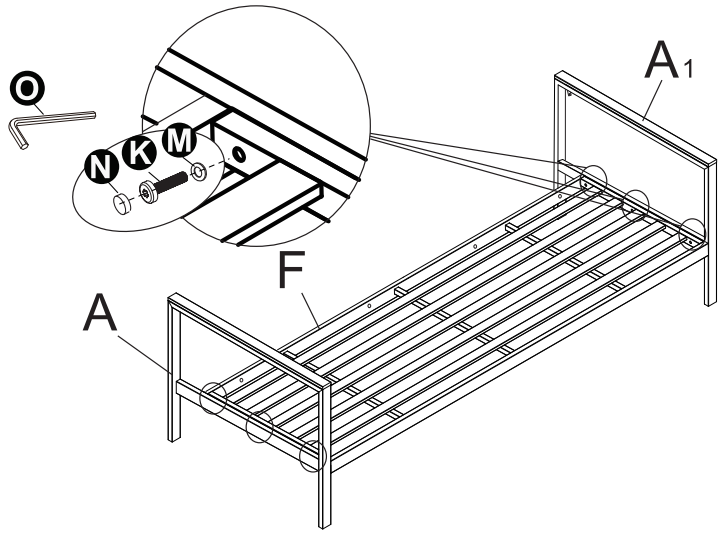

2/3

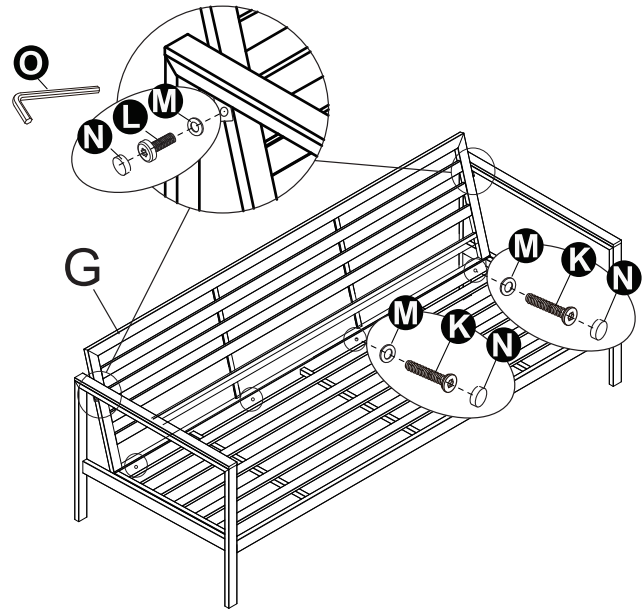

Assembly

3/3

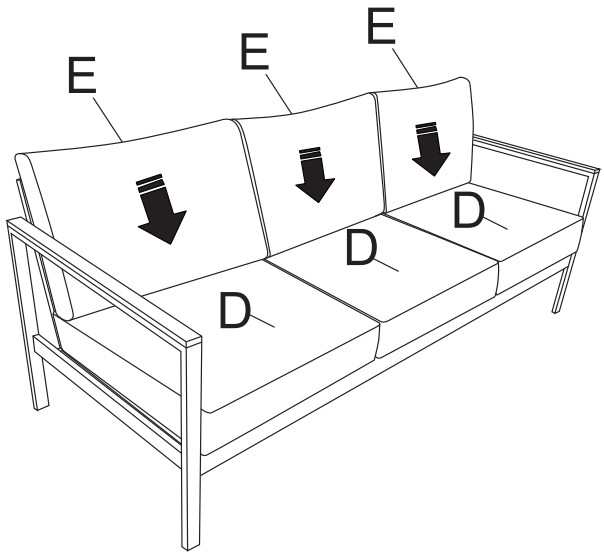

Assembly

List of parts

P	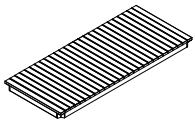	1
Q	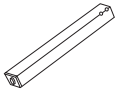	4
R		8
S		8
O		1

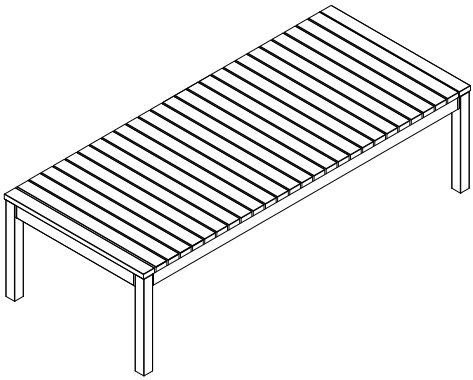

Assembly

1/2

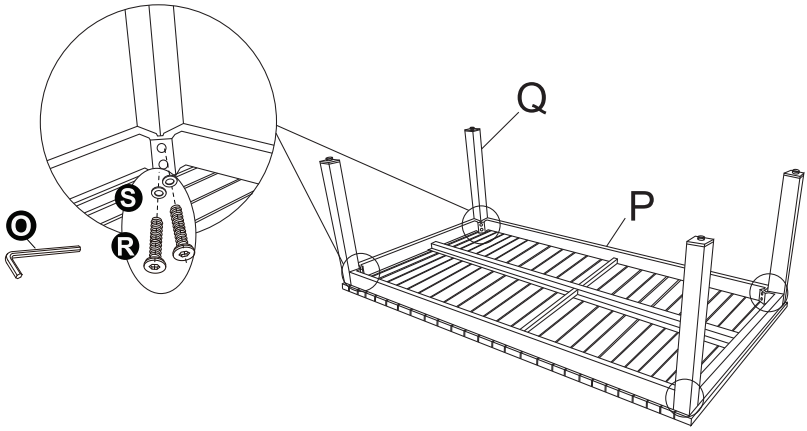

2/2

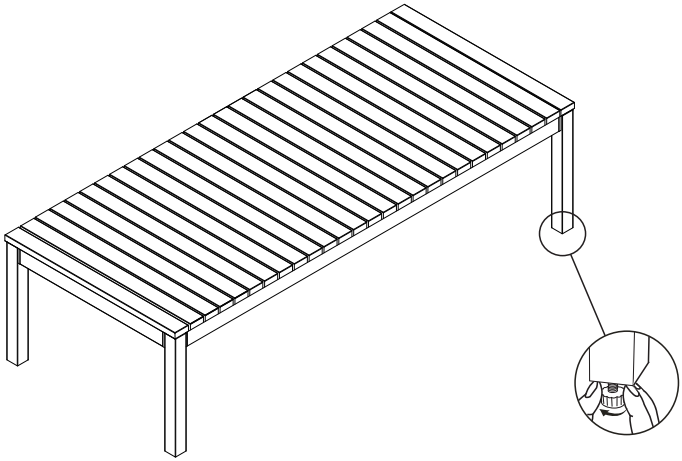

Maximum load

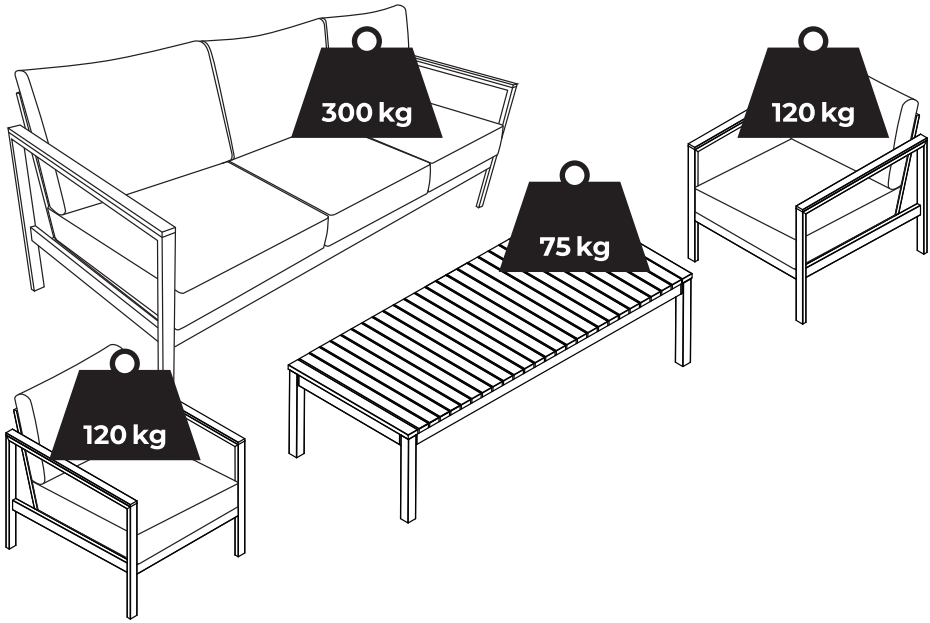

dako
FURNITURE



Made in China

DISTRIBUTION AND IMPORTER

Dako Furniture Ltd
Unit 6 Airfield Industrial Estate
Shipdham
IP25 7SD
UK